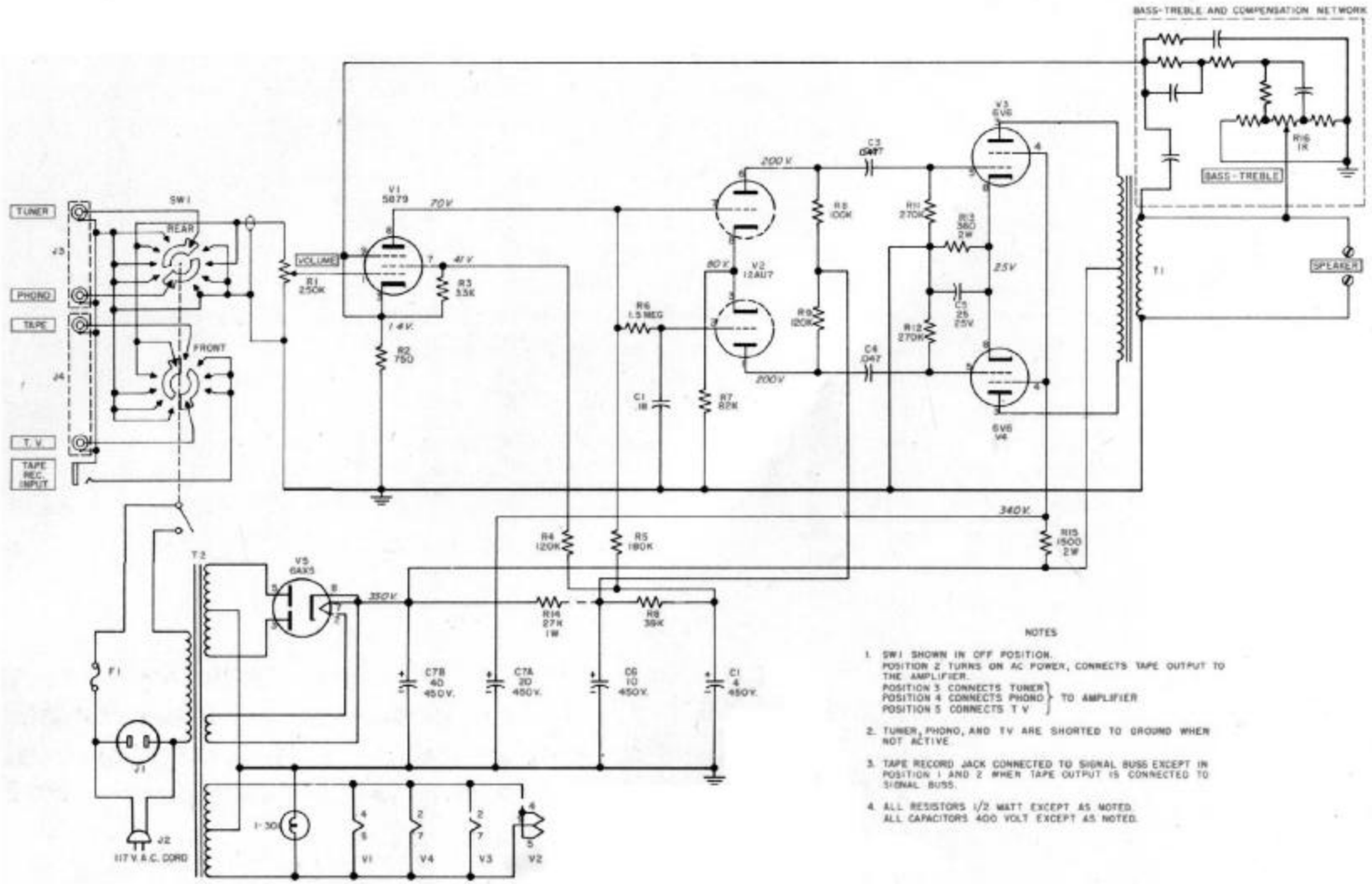

NOTES

1. SW1 SHOWN IN OFF POSITION.
   POSITION 2 TURNS ON AC POWER, CONNECTS TAPE OUTPUT TO THE AMPLIFIER.
   POSITION 3 CONNECTS TUNER
   POSITION 4 CONNECTS PHONO } TO AMPLIFIER
   POSITION 5 CONNECTS T V
2. TUNER, PHONO, AND TV ARE SHORTED TO GROUND WHEN NOT ACTIVE.
3. TAPE RECORD JACK CONNECTED TO SIGNAL BUSS EXCEPT IN POSITION 1 AND 2 WHEN TAPE OUTPUT IS CONNECTED TO SIGNAL BUSS.
4. ALL RESISTORS 1/2 WATT EXCEPT AS NOTED.
   ALL CAPACITORS 400 VOLT EXCEPT AS NOTED.